Problem # 1

When a car has a dead battery, it can often be started by connecting the battery from another car across its terminals. The positive terminals are connected together as are the negative terminals. The connection is illustrated in the following Figure. Assume the current i in the Figure is measured and found to be 30 A.

a) Which car has the dead battery?

b) If this connection is maintained for 1 min, how much energy is transferred to the dead battery?

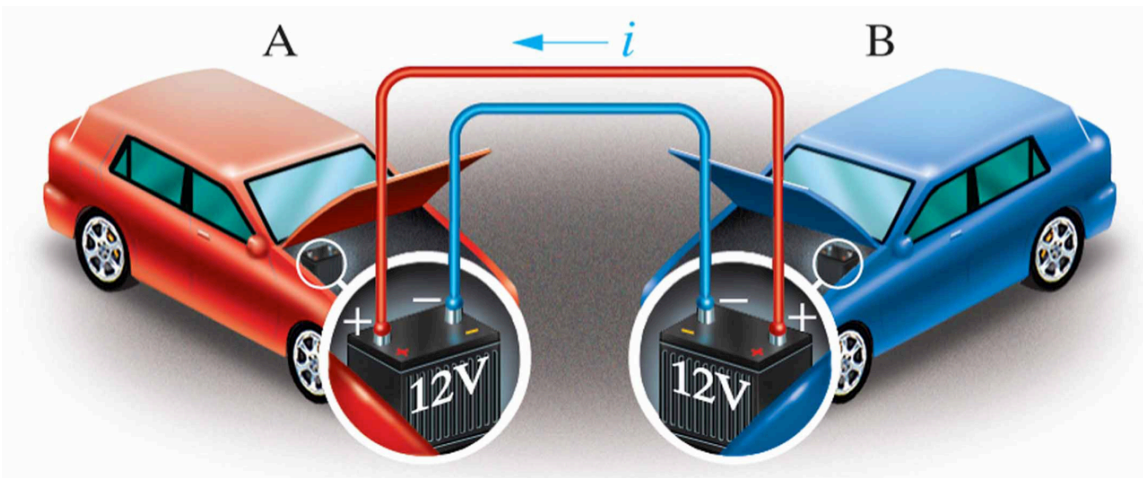

Solution:

[a] In Car A, the current i is in the direction of the voltage drop across the 12 V battery(the current i flows into the + terminal of the battery of Car A). Therefore using the passive sign convention,
$p = vi = (30)(12) = 360$ W.
Since the power is positive, the battery in Car A is absorbing power, so Car A must have the "dead" battery.

[b] $w(t) = \int_0^t p\,dx; \qquad 1 \text{ min} = 60 \text{ s}$

$$w(60) = \int_0^{60} 360\,dx$$

$$w = 360(60 - 0) = 360(60) = 21{,}600 \text{ J} = 21.6 \text{ kJ}$$

Problem #2

The manufacturer of a 1.5 V D flashlight battery says that the battery will deliver 9 mA for 40 continuous hours. During that time the voltage will drop from 1.5 V to 1.0 V. Assume the drop in voltage is linear with time. How much energy does the battery deliver in this 40 h interval?

Solution:

$p = vi; \qquad w = \int_0^t p\,dx$

Since the energy is the area under the power vs. time plot, let us plot p vs. t.

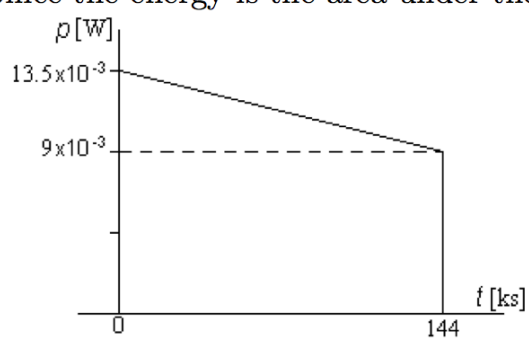

Note that in constructing the plot above, we used the fact that 40 hr $= 144{,}000$ s $= 144$ ks

$p(0) = (1.5)(9 \times 10^{-3}) = 13.5 \times 10^{-3}$ W

$p(144 \text{ ks}) = (1)(9 \times 10^{-3}) = 9 \times 10^{-3}$ W

$w = (9 \times 10^{-3})(144 \times 10^{3}) + \frac{1}{2}(13.5 \times 10^{-3} - 9 \times 10^{-3})(144 \times 10^{3}) = 1620$ J

Problem #3

Assume you are an engineer in charge of a project and one of your subordinate engineers reports that the interconnection in the given Figure does not pass the power check. The data for the interconnection are given in Table.

a) Is the subordinate correct? Explain your answer.

b) If the subordinate is correct, can you find the error in the data?

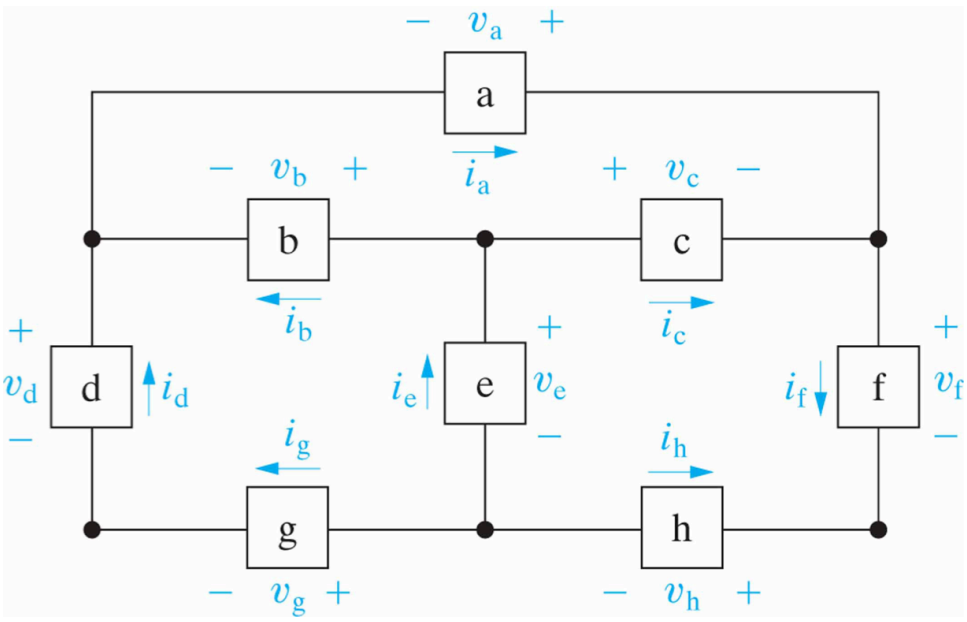

Element	Voltage (V)	Current (A)
a	46.16	6.0
b	14.16	4.72
c	−32.0	−6.4
d	22.0	1.28
e	33.6	1.68
f	66.0	−0.4
g	2.56	1.28
h	−0.4	0.4

Solution:

[a] From the diagram and the table we have

$$
\begin{aligned}
p_a &= -v_a i_a = -(46.16)(-6) = -276.96 \text{ W} \\
p_b &= v_b i_b = (14.16)(4.72) = 66.8352 \text{ W} \\
p_c &= v_c i_c = (-32)(-6.4) = 204.8 \text{ W} \\
p_d &= -v_d i_d = -(22)(1.28) = -28.16 \text{ W} \\
p_e &= -v_e i_e = -(33.6)(1.68) = -56.448 \text{ W} \\
p_f &= v_f i_f = (66)(-0.4) = -26.4 \text{ W} \\
p_g &= v_g i_g = (2.56)(1.28) = 3.2768 \text{ W} \\
p_h &= -v_h i_h = -(-0.4)(0.4) = 0.16 \text{ W} \\
\sum P_{del} &= 276.96 + 28.16 + 56.448 + 26.4 = 387.968 \text{ W} \\
\sum P_{abs} &= 66.8352 + 204.8 + 3.2768 + 0.16 = 275.072 \text{ W}
\end{aligned}
$$

Therefore, $\sum P_{del} \neq \sum P_{abs}$ and the subordinate engineer is correct.

[b] The difference between the power delivered to the circuit and the power absorbed by the circuit is

$$-387.986 + 275.072 = -112.896 \text{ W}$$

One-half of this difference is -56.448 W, so it is likely that p_e is in error. Either the voltage or the current probably has the wrong sign. (In Chapter 2, we will discover that using KCL at the node connecting components b, c, and e, the current i_e should be -1.68 A, not 1.68 A!) If the sign of p_e is changed from negative to positive, we can recalculate the power delivered and the power absorbed as follows:

$$
\begin{aligned}
\sum P_{del} &= 276.96 + 28.16 + 26.4 = 331.52 \text{ W} \\
\sum P_{abs} &= 66.8352 + 204.8 + 56.448 + 3.2768 + 0.16 = 331.52 \text{ W}
\end{aligned}
$$

Now the power delivered equals the power absorbed and the power balances for the circuit.